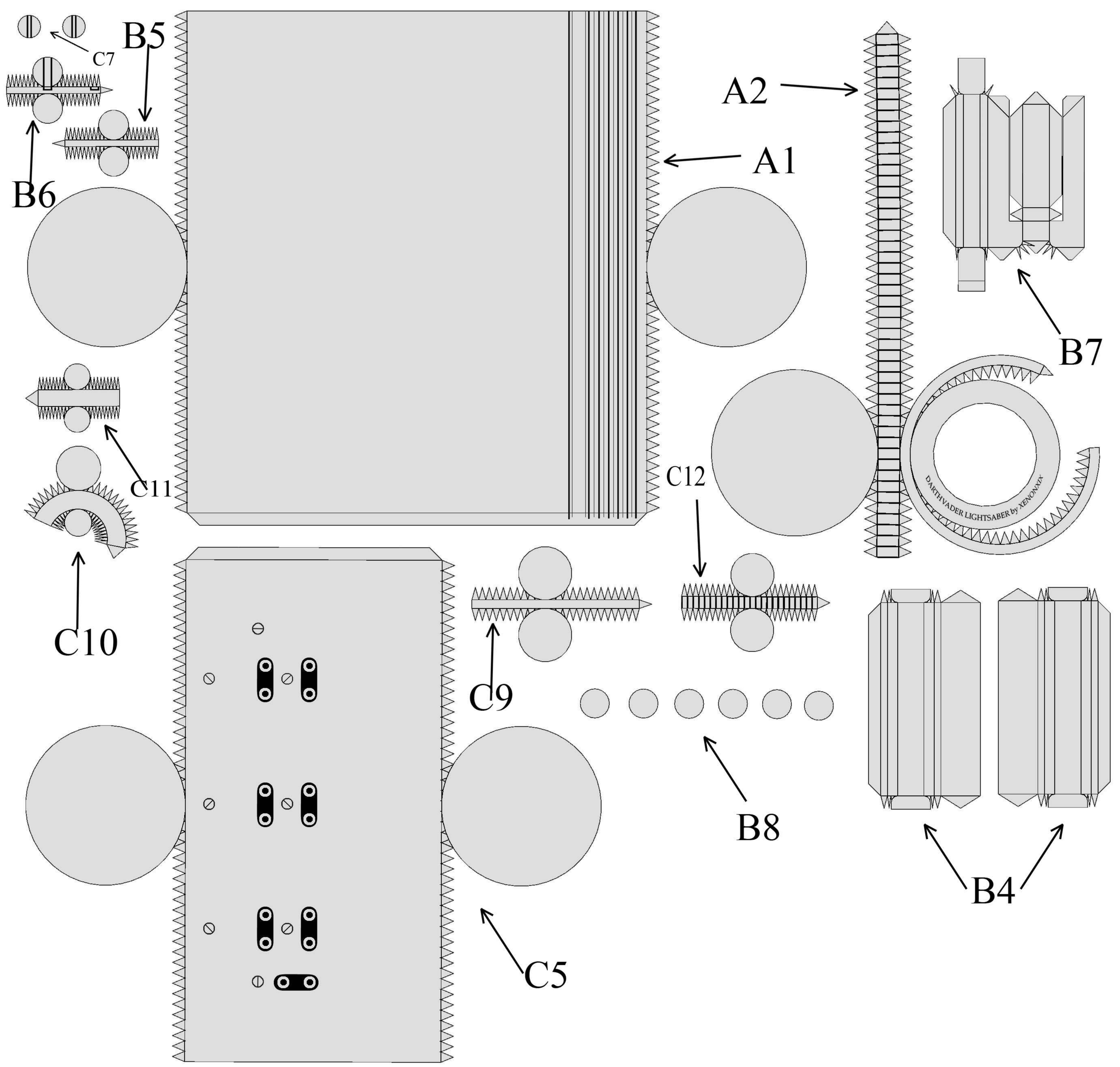
B5
C7
B6
A2
A1
B7
C11
C12
C10
C9
B8
B4
C5
DARTH VADER LIGHTSABER by XENONIX

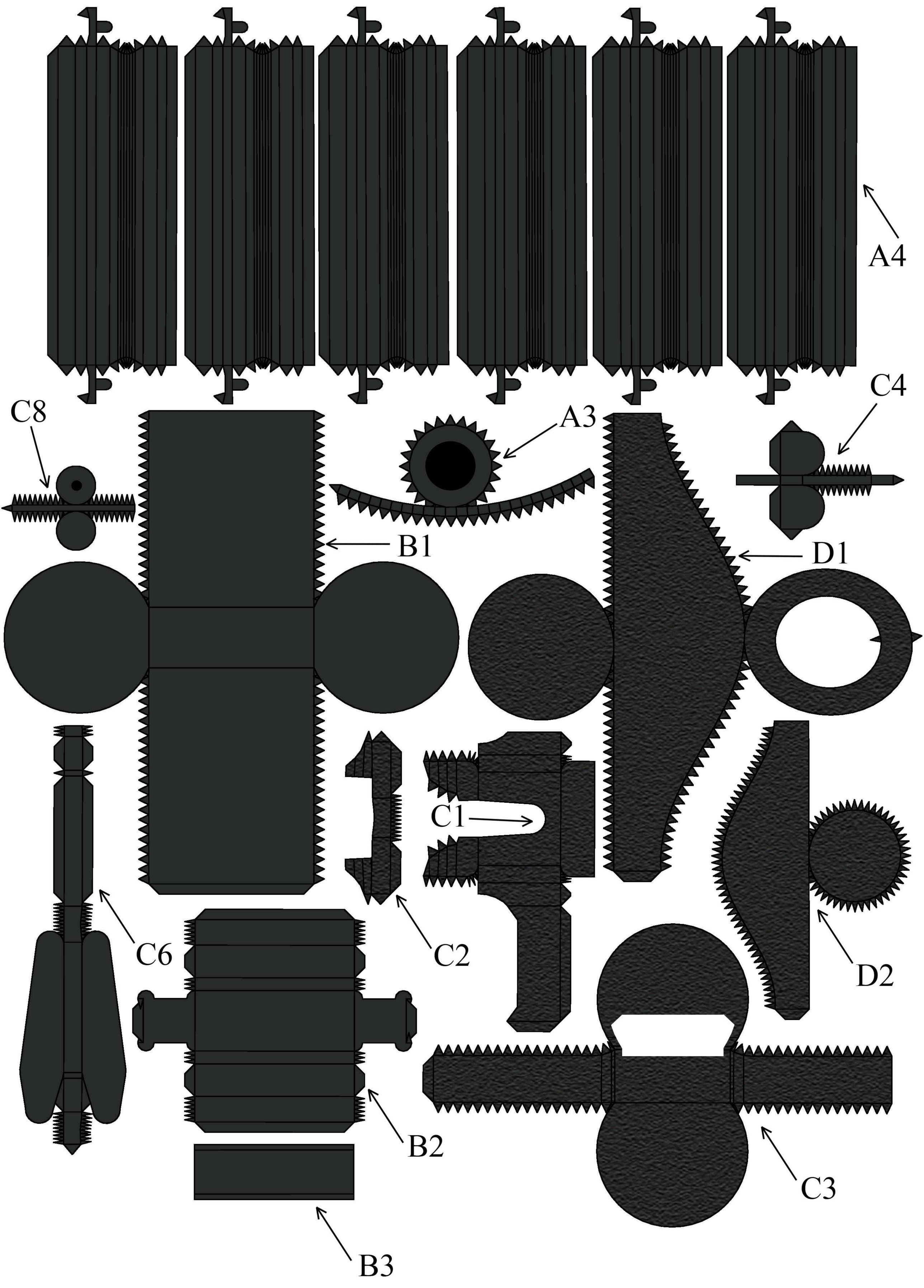
A4
C4
C8
A3
B1
D1
C1
C6
C2
D2
B2
C3
B3

STAR WARS

EPISODE IV: A NEW HOPE

DARTH VADER LIGHTSABER

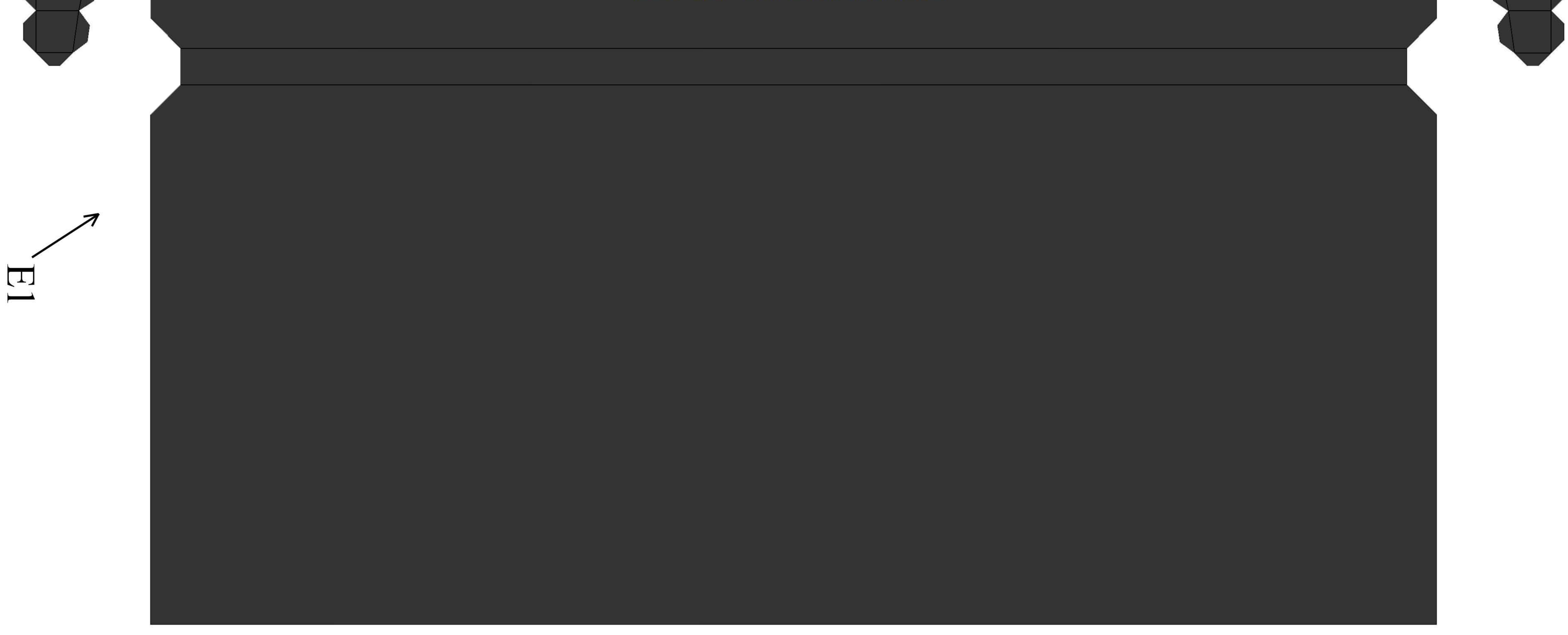

E1

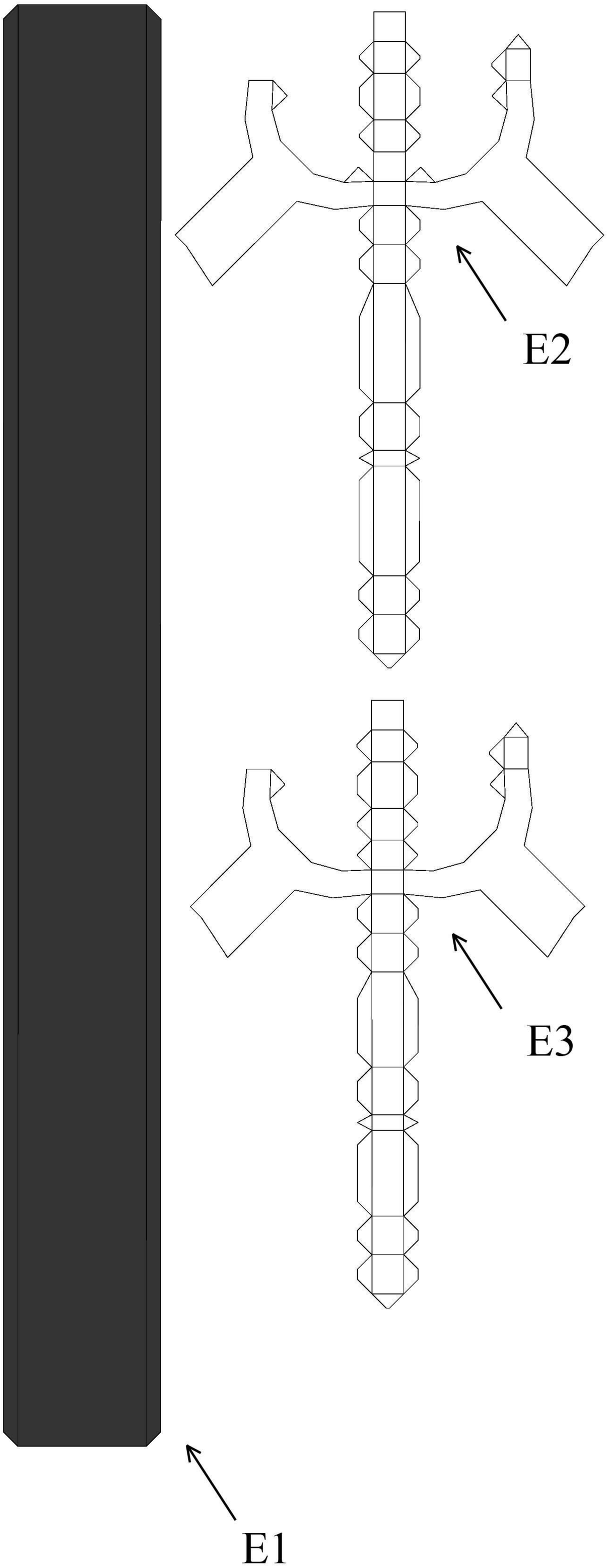
E2
E3
E1